Current part is item (8) on diagram. Available at www.oshkoshequipment.com

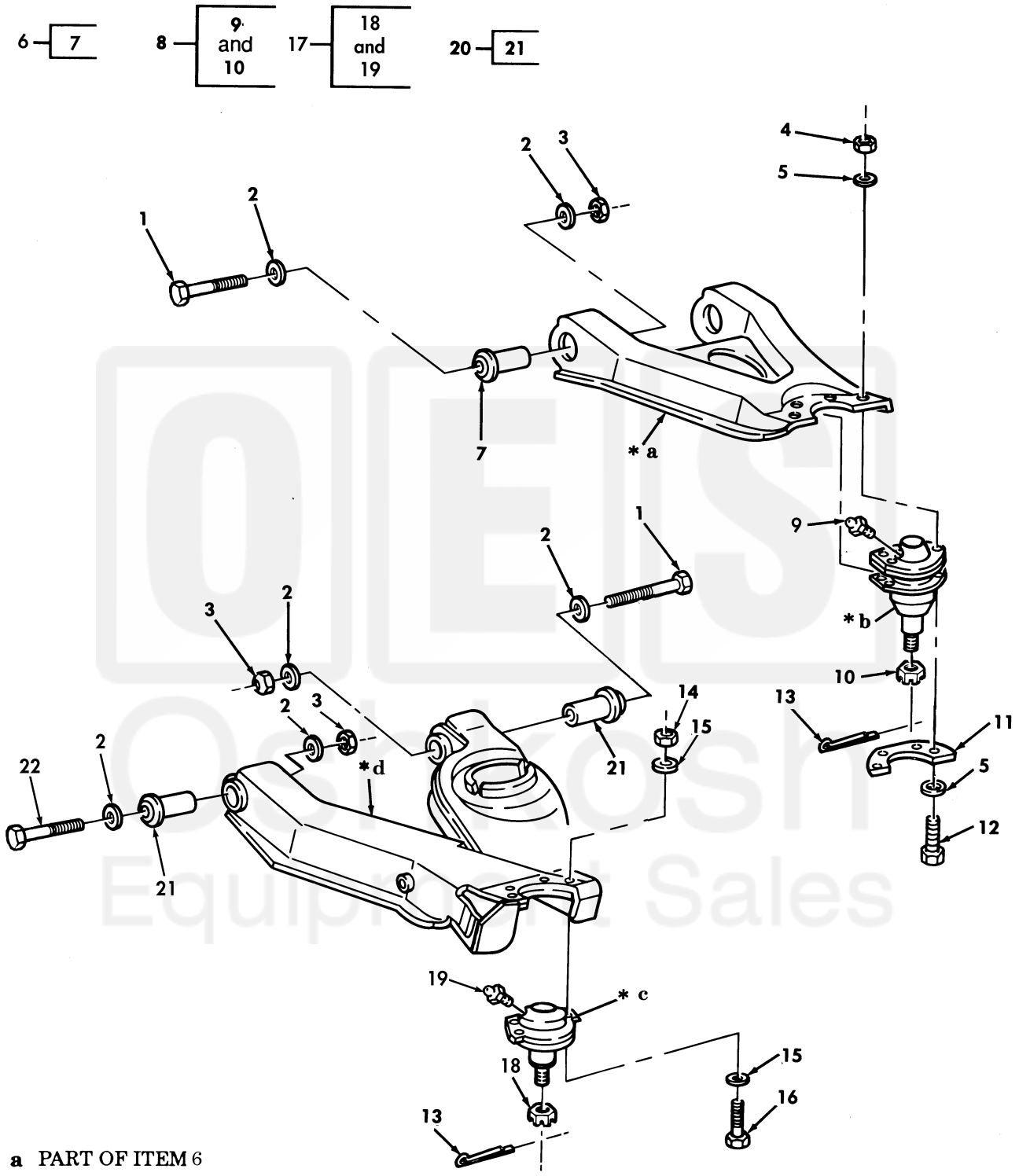

* a PART OF ITEM 6
* b PART OF ITEM 8
* c PART OF ITEM 17
* d PART OF ITEM 20

Figure 144. Front Control Arms, Ball Joints, and Mounting Hardware.

Current part is item (8) on diagram. Available at www.oshkoshequipment.com

Current part is item (8) on diagram. Available at www.oshkoshequipment.com

(1) ITEM NO	(2) SMR CODE	(3) NSN	(4) CAGEC	(5) PART NUMBER	(6) DESCRIPTION AND USABLE ON CODES(UOC)	(7) QTY
					GROUP 1004 STEERING AND LEANING WHEEL MECHANISM	
					FIG. 144 FRONT CONTROL ARMS,BALL JOINTS,AND MOUNTING HARDWARE	
1	PAOZZ	5305009474361	80204	B1821BH075C475N	SCREW,CAP,HEXAGON H 3/4-10 X 4.75..	6
2	PAOZZ	5310011474052	23862	2436168	WASHER,FLAT 3/4.....	16
3	PAOZZ	5310004093333	96906	MS51943-45	NUT,SELF-LOCKING,HE 3/4-10.....	8
4	PAOZZ	5310008140673	96906	MS51943-35	NUT,SELF-LOCKING,HE 5/16-18..... UOC:AVY,A11,A13,A14,A15,A20,A24,A25, A26,A27,B16,B17,B18,HVY,H11,H13,H14, H15,H16,H17,H18,H20,H21,H24,H25,H26, H27,H28,MMM	8
4	PAOZZ	5310008140672	96906	MS51943-36	NUT,SELF-LOCKING,HE 3/8-24..... UOC:BVY,B15,B20,B24,B25,C17,NNN	8
5	PAOZZ	5310011191024	24617	2436162	WASHER,FLAT 5/16..... UOC:AVY,A11,A13,A14,A15,A20,A24,A25, A26,A27,B16,B17,B18,HVY,H11,H13,H14, H15,H16,H17,H18,H20,H21,H24,H25,H26, H27,H28,MMM	16
5	PAOZZ	5310014124013	24617	2436163	WASHER,FLAT 3/8..... UOC:BVY,B15,B20,B24,B25,C17,NNN	16
6	PAOFF	2530011757211	34623	5584769	ARM,CONTROL,VEHICUL FRONT,L.H..... UOC:AVY,A11,A13,A14,A15,A20,A24,A25, A26,A27,B16,B17,B18,HVY,H11,H13,H14, H15,H16,H17,H18,H20,H21,H24,H25,H26, H27,H28,MMM	1
6	PAOFF	2530011764650	34623	5584770	ARM,CONTROL,VEHICUL FRONT,R.H..... UOC:AVY,A11,A13,A14,A15,A20,A24,A25, A26,A27,B16,B17,B18,HVY,H11,H13,H14, H15,H16,H17,H18,H20,H21,H24,H25,H26, H27,H28,MMM	1
6	PAOFF	2530014147844	19207	12460167	ARM,CONTROL,VEHICUL FRONT,L.H..... UOC:BVY,B15,B20,B24,B25,C17,NNN	1
6	PAOFF	2530014131365	19207	12460151	ARM,CONTROL,VEHICUL FRONT,R.H..... UOC:BVY,B15,B20,B24,B25,C17,NNN	1
7	PAFZZ	3120011865527	19207	12338270	.BUSHING,SLEEVE.....	2
8	PAOZZ	2530011883685	98349	C-205-TEZ-35	PARTS KIT,BALL JOIN..... UOC:AVY,A11,A13,A14,A15,A20,A24,A25, A26,A27,B16,B17,B18,HVY,H11,H13,H14, H15,H16,H17,H18,H20,H21,H24,H25,H26, H27,H28,MMM	2
8	PAOZZ	2530014131366	34623	6007755	PARTS KIT,BALL JOIN..... UOC:BVY,B15,B20,B24,B25,C17,NNN	2
9	PAOZZ	4730000504203	96906	MS15001-1	.FITTING,LUBRICATION.....	1
10	PAOZZ	5310008507004	96906	MS35692-54	.NUT,PLAIN,SLOTTED,H 5/8-18.....	1
11	PAOZZ	2530012101324	19207	12338320	RETAINER,BALL JOINT UPPER..... UOC:AVY,A11,A13,A14,A15,A20,A24,A25, A26,A27,B16,B17,B18,HVY,H11,H13,H14, H15,H16,H17,H18,H20,H21,H24,H25,H26, H27,H28,MMM	2
12	PAOZZ	5305014125994	19207	12460159	SCREW,CAP,HEXAGON H 3/8-24 X 1.375. UOC:BVY,B15,B20,B24,B25,C17,NNN	8
12	PAOZZ	5306002264829	80204	B1821BH031C125N	SCREW,CAP,HEXAGON H 5/16-18 X 1.125	8

Current part is item (8) on diagram. Available at www.oshkoshequipment.com